Selecting the Right Machine

*The **strong rugged design** of the **4000 Series** has been developed to meet the needs of the most demanding Market Segments.*

From the high volume butcher to the large wholesaler through to the largest industrial plants.

Low load standard height machines or raised machines (see technical specification).

Offering BOWL CAPACITIES FROM **200L** TO **400L** (fresh meat) the 4000 model best suited for your application can be selected from the following;

Illustrating 4200 Frozen 4 Speed Inverter Feedscrew Controller with Digital Readout

MODELS IN THE SERIES INCLUDE :

4000-56 standard or raised machine - 200 L bowl 56 Size cutting head
4200-56 standard or raised machine - 300 L bowl 56 Size cutting head
4300-56 standard or raised machine - 400 L bowl 56 Size cutting head
(Bowl capacities are to be used as an indicative figure only and are based on whole muscle beef product at 2° C)

4200 FROZEN-56 standard or raised machine - 350 L bowl 56 Size cutting head (4200 frozen bowl capacity based on frozen flake)

ALL MACHINES ARE AVAILABLE WITH **56, 66** OR **GU 160** CUTTING HEAD OPTIONS.

Production Performance lbs / hr (based on -1°C to +4°C meat temp)

Machine / Model	Muscle & Trim: 12mm hole plate	Muscle & Trim: 6mm hole plate	Muscle & Trim: 3mm hole plate	Sausage Emulsion: 6mm hole plate	Sausage Emulsion: 3mm hole plate
4000 / 4200 / 4300 - 56 Cutting Head	4000	3000	2000	2700	2000
4000 / 4200 / 4300 - 66 Cutting Head	4500	3600	2800	3200	2500

Thompson recommends SPECO knives and plates as their preferred cutting system.
Production rates are indicative and dependent upon machine model, the product and the temperature of the product.
Technical data is to be used as a guide only and is subject to change without notice.

Production Performance lbs / hr:

(based on -10°C Flaked to "Tempered" meat temp): 1st Speed

Machine / Model	12mm hole plate	8mm hole plate
4200 Frozen-56 or GU 160	1800	1600

Shipping Specifications:

Machine / Model	Ship Size (mm)	Ship Weight (kg)
4000-56 (Std)	1600 x 990 x 1700 H	600
4200-56 (Std)	1800 x 990 x 1800 H	860
4300-56 (Std)	2170 x 990 x 1910 H	980
4200 Frozen-56, 66 or GU 160	2170 x 990 x 1910 H	1040

Dimensions and weights may vary in the course of development.
Thompson recommends SPECO knives and plates as their preferred cutting system.
Production rates are indicative and dependent upon machine model, the product and the temperature of the product.
Technical data is to be used as a guide only and is subject to change without notice.

Options

- Stainless Steel elevating stands
- Variable speed drives
- Controllable mix / mince cycles
- PLC pre-set programmable control
- Product temperature readout
- GEMINI connection / systems
- Pneumatic lid operation
- CO2 Cooling
- Bone elimination system
- Feedscrew / knife & plate trolley
- Ingredients / Liquid chute in lid
- Load cells to mixing bowl
- Feedscrew ejector

THE OPTIONAL 66 SIZE HEAD

With the 66 Size head the OUTSTANDING PROCESSING PERFORMANCE and capabilities of the 4000 series machines are FURTHER IMPROVED.

The flared head design and the **8 5/8"** DIAMETER KNIVES AND PLATES of the 66 Size INCREASES PRODUCTION rates on fresh mince and sausage emulsions by as much as **20 %** over the 56 Size head.

Production rates and the DEFINITION OF CUT IS IMPROVED and the 66 head is RECOMMENDED as a very favorable OPTION to a STANDARD 4000 Series machine when higher demands of processing are required.

THE 66 SIZE HEAD COMPLIMENTS THE POWERFUL MOTORS AND TOUGH DIRECT DRIVES OF THE 4000 SERIES OFFERING THE OPTION OF FURTHER GAINS IN MINCING CAPABILITIES.

Increasing the head size to 66 (8 5/8") also assists in reducing cutting head pressures - reducing smearing possibilities and offering a very high definition of cut.

Manufactured in accordance with AS, CE, USDA, UL, CUL and GS Regulations

4000 Series Technical Specifications

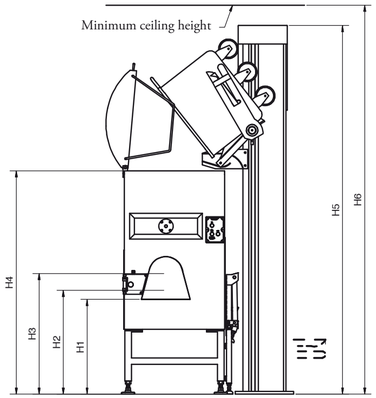

Raised Machine(s) 200L Bin Load and Discharge

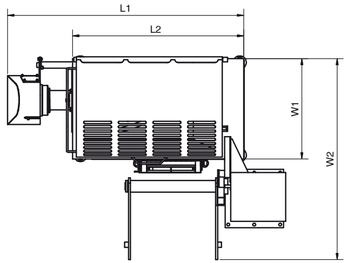

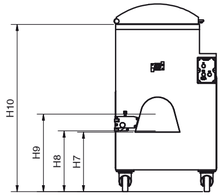

Standard Machine

Technical data is to be used as a guide only and is subject to change without notice.

Dimensions (mm):

Machine / Model	H1	H2	H3	H4	H5	H6	H7	H8	H9	H10	L1	L2	W1	W2
4000-56 (Std)							459	468	598	1290	1608	1034	774	
4000-56 (raised)	730	800	930	1722	2843	3000					1608	1034	774	N/A
4200-56 (Std)							459	468	598	1410	1819	1317	774	
4200-56 (raised)	730	800	930	1722	2843	3000					1819	1317	774	1550
4300-56 (Std)							459	468	598	1510	2155	1653	792	
4300-56 (raised)	730	800	930	1802	2843	3000					2155	1653	792	1560
4200-Frozen (Std)							459	468	598	1510	2286	1491	792	
4200-Frozen (raised)	730	800	930	1802	2843	3000					2286	1491	792	1960

Dimensions and weights may vary in the course of development

Technical Specifications (based on 415V / 50hz):

Machine	Bowl Capacity Litres	Mix Capacity	Mixer Motor	Mince Motor	Full Load Current (50 hz)	*Power Supply (Amps)
4000-56	200	150kg (fresh trim)	1.5 kw	15 kw - 2 speed	32 A	63 A
4200-56	300	1 x 200L bin	2.2 kw	15 kw - 2 speed	33 A	63 A
4300-56	400	1.5 x 200L bin	4 kw	15 kw - 2 speed	37 A	80 A
4200 Frozen - 56	350	1 x 200L bin (90kg Frozen flake - beef)	4 kw	15 kw - 2 speed or single speed	37 A	80 A
4200 Frozen - 66	350	1 x 200L bin (90kg Frozen flake - beef)	4 kw	15 kw - 2 speed or single speed	37 A	80 A

*Machine power supply to be fitted with a "D" curve motor start circuit breaker
Overload protection to motors
(Bowl capacities are to be used as an indicative figure only and are based on whole muscle beef product at +2° C)

THOMPSON MEAT MACHINERY
134 MAGNESIUM DRIVE, CRESTMEAD, QLD AUSTRALIA 4132
PHONE +61 7 3803 6643 — FAX +61 7 3803 6635
EMAIL sales@tmach.com.au – WEB www.tmach.com.au

THOMPSON MEAT MACHINERY

4000 Series Mixer Mincers

Standard Height
Model 4200 Frozen
Optional Variable Speed Control
Digital Readout

LEADING MANUFACTURERS OF MEAT PROCESSING MACHINERY

The Thompson 4000 Series of Mixer Mincers

*Used extensively in **high production** facilities throughout the World, the 4000 Series is renowned for its **outstanding performance and reliability.***

The CONSTRUCTION of the 4000 Series is robust and built to last. Manufactured from high quality Stainless Steel a strong structured framework supports a thick gauge mixing bowl and panels that are fully seam Welded both inside and outside the bowl.

The standard height machines incorporate a heavy gauge domed lid with an open grilled section for ingredients adding or viewing of the mix cycle.

An ingredients or liquids pouring channel is also offered as an option.

Heavy Duty Stainless Steel Mixing Paddles, Mincing Barrel, Feedscrew and Lockring are standard construction on these renowned machines.

The **4000 Series** has been designed and developed to the high standards of safety and finish demanded by **CE / USDA** and **GS** regulations.

All models specifically incorporate the **"smart design" mixing bowl and paddle and are finished with smooth hygienic surfaces to panels and welds to achieve a clean bowl on product discharge and ease the cleaning down process at the end of production.

The Mixing Paddle and Mince Transmission are powered with Independent Geared Motor Drives. No more oily greasy chains, no more continual maintenance of pulleys and belt drives.

Smooth, compact and quiet the heavy duty drives are very efficient in transmitting maximum power from large hp motors - featuring a standard 2 speeds on the feedscrew drive with high torque on low speed.

Both feedscrew and mixing drives have been engineered and developed over many years of research optimising RPM's and involving many varied processing applications.

The PERFORMANCE of the 4000 Series speaks for itself.

Time and again sausage manufacturers have commented about the processing capabilities of the 4000 machines.

**Specifically designed paddle blade angles and configurations ("smart design") maximize the product displacement and movement within corresponding mixing bowls that have been specifically contoured to accentuate the mixing action.

Within the reciprocating mixing paddle cycle, product is free tumbled from top to bottom to top and from corner to corner within the bowl to deliver a very homogeneous mix within a short time period.

Sausage mix is quickly yet gently mixed and consistently amalgamated and separated.

The 4000 mixing cycle is controlled by a factory "pre-set" or easily adjusted reciprocating mix cycle that achieves a well distributed particle mix for coarse ground high definition products or emulsified evenly seasoned products.

The standard cutting head on the 4000 Series is "56" (152 mm or 6"). The optional cutting heads are "66" (220 mm or 8 5/8") or "GU" 160 double cut system. These cutting heads Deliver High Production Rates to a variety of products from Tempered or Flaked Frozen Meat to Light Fresh Mince.

Fed by feedscrew designs that have been mastered and evolved over a long history the Thompson 4000 delivers a constant feed to a cutting head that itself is at the cutting edge of technology - delivering a clean cutting action.

The mixing bowl and cutting head features all combine to offer a very homogeneously mixed product with a high definition cut in short mix/mince cycles, therefore limiting heat rise to the product.

Standard 4000 Model
15kW - 2 Speed Mince Motor - 56 Cutting Head with Stainless Steel barrel, Feedscrew and Aluminum Bronze Lock Ring

Powerful two speed grind motor with high torque direct drive transmission.

Consider the following production rates - **56 head;**

4000 kg / hour	**12mm plate**	**(66 kg / minute)**
3000 kg / hour	**5mm plate**	**(50 kg / minute)**
2000 kg / hour	**3mm plate**	**(33 kg / minute)**

or with the OPTIONAL - **66 head;**

4500 kg / hour	**12mm plate**	**(75 kg / minute)**
3600 kg / hour	**5mm plate**	**(60kg / minute)**
2800 kg / hour	**3mm plate**	**(46 kg / minute)**

(Dependent upon the product and temperature of the product)

SAFETY FEATURES on the 4000 Series are plentiful since the machine was also developed with safety as a premium concern, conforming to the high demands of local and overseas regulations.

The **safety interlocked lid** is a standard feature on all machines incorporated with a maximum stop time on the machine cycle, limiting any possibility of human interference with rotating parts.

A safety interlocked discharge guard is also a standard feature.

A feedscrew ejector can be built into the machine to reduce the risk in removing knives, plates and feedscrews. (The feedscrew ejector is a standard feature of the CE designed machines.)

Standard height machines are designed for ergonomic low load heights.

On the raised machines (built for 200 litre bin feed and discharge) the optional inspection step and platform are safety interlocked and offered with the lid or no lid option including the inspection mirror option.

OPERATOR CONTROL of the 4000 Series machines is very straightforward and user friendly.

From the simple 3 push button machine as a standard - to optional degrees of control:

- Variable Speed Dial Control
- Programmable Pre-select Speed control
- Full Programmable Logic Control

Standard 4000 Model
15 kW - 2 Speed Mince - 56 Head
Gemini Connection - available to various machines

Raised 4200 Model
15 kw - 2 Speed Grind - 56 Head with Stainless Steel barrel, Feedscrew and Lock Ring

Optional Thompson 200L Loading Hoist and Bin

GEMINI SYSTEMS The connection of two machines to incorporate a Continuous Mincing System or Process.

Connecting a Primary Mixer Mincer for the first mince operation which then Automatically Feeds through an Interconnected Tube to the Secondary Mixer Mincer for continuous processing of the second mince operation.

Product transfer is achieved through a guarded interconnecting tube, by a safety interlocked transfer tube or a combination of both.

The machines can also be easily separated in the event that different processing applications may be required i.e. batching of formulated product or emulsions.

The Gemini system allows Thompson 4000 Series Mixer Mincers to be connected in tandem with multiple machines including non Thompson machines.

The Advantages from Utilising Gemini Systems for continuous mincing can include Reduced Capital Equipment Cost from eliminating second mechanical loading hoist or device, Labour Cost Savings from improved operation efficiencies in production and Improved Product Quality by eliminating product storage and processing time during the 1st and 2nd mincing operations.

The Thompson 4200 FROZEN Mixer Mincer

*Incorporating all of the **strength and features** of the **4000 Series** the **4200 FROZEN MIXER MINCER** has been designed and constructed to withstand the higher forces and demands of **processing hard frozen product.***

The construction of the heavy duty reinforced bowl and paddles have been structurally engineered to process tempered blocks size of 150 x 150 x 400mm at -1°C. Frozen Blocks of Meat 50mm Cube or Flaked at -10°C through a Minimum Hole Plate of 8mm Diameter.

The frozen feedscrew is uniquely designed with an infeed bellow in the channel to the barrel.

This Bellow incorporated with the specific flight design to the feedscrew cuts the product into small pieces and feeds to the cutting head.

Powerful motors with high torque transmissions achieve high production rates on coarse mince with a hard dry product.

The 4200 frozen model is designed to break and mince the cold hard dry product - frozen meat.

Built to handle the pre cut pieces of a frozen meat block the 4200F is ideal for first cut mincing to 8 mm. If Mincing below 8 mm Hole Plate Size is required it is recommended that an Inverter Upgrade Modification be made to the standard 2 speed machine. This upgrade can provide Infinite Speed Control or our recommended 4 Speed Control at determined and pre-set speeds that will offer Maximum Production Outputs for customer specific products at various frozen product temperatures.

With this upgrade the Thompson 4200 Frozen Mixer Mincer is capable of mincing a range of frozen product through a 3 mm hole plate.

Heavy Duty Bowl
and paddle - frozen 4200

4kw Paddle Drive

With all the benefits of the **4000 Series MIXING** system and incorporating the **2 speed mince motor** the **4200 FROZEN** model is a very versatile machine to many production requirements.

Used for **FROZEN PRE-MINCING ON 1st SPEED** it can be as easily utilized for **HIGH PRODUCTION PROCESSING ON FRESH MINCE OR SAUSAGE EMULSION ON THE HIGHER 2nd SPEED.**

4200 Frozen Model (with optional stand)
15 kW - 1st Speed Mince for Frozen
15 kW - 2nd Speed Mince for Fresh